Typical Transducer Specifications

*Tension Range: Supplied to Customer's requirements.
*Contact Elements: To fit application.
*Operating Temperature: 70° ± 25° F. (Special ranges available)
*Connecting Terminals: 5 pin Amphenol plug or terminated ends.
*Excitation Voltage: 4-10 VDC.
*Bridge Resistance: 350 ohms nominal.
*Output Signal: 1.0 - 2.0 mv/V nominal.
*Resistance to Ground: Exceeding 500 Megaohms.
*Zero Balance: Less than 1.5% FS
*Drift at Midpoint: 0.2%
*Noise Level: Less than 0.2%
*Linearity: 0.5%
*Combined Linearity & Hysteresis: ±.75%
*Total Error: 1% FS
*Overload Tension: 50% Overated
*Shielded Cable: 10' standard length.

Zone	Revision History			
	Rev.	Description	Date	Approval

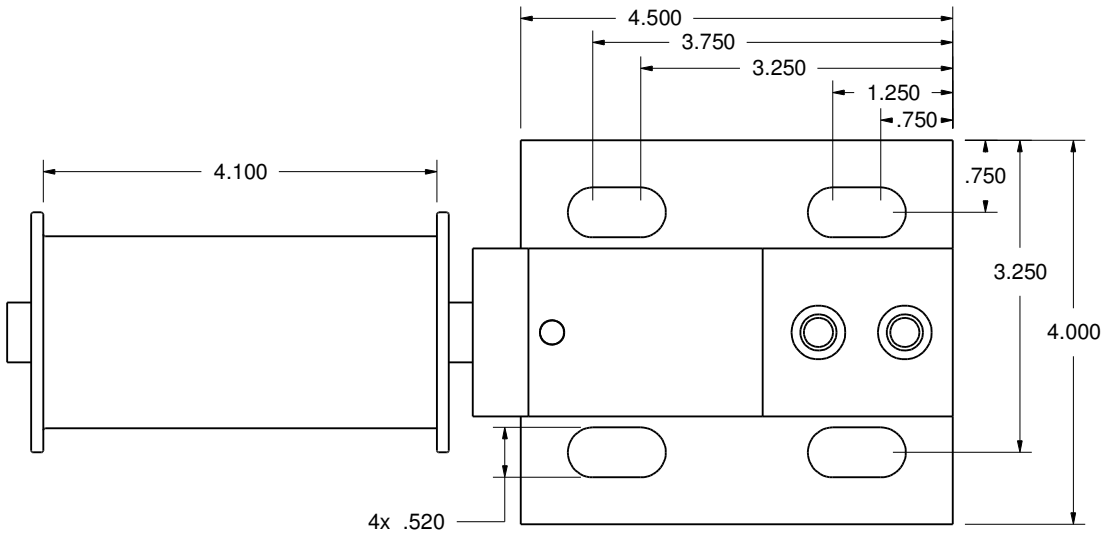

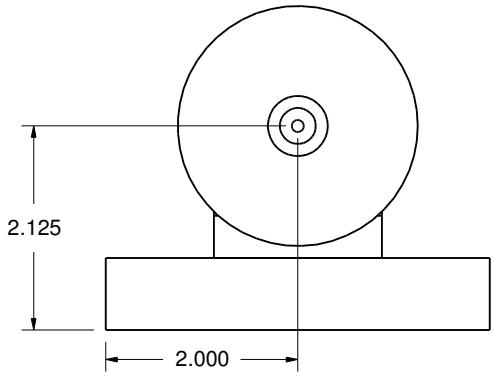

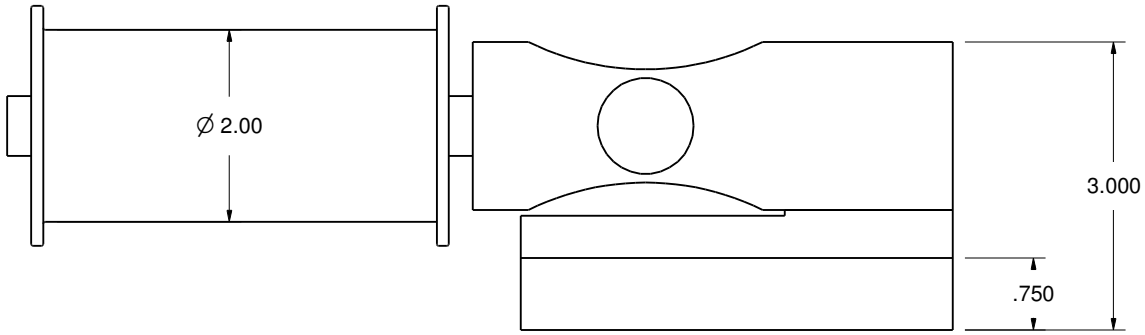

Application Note:

Roller configuration adjustable to meet specific applications. For optimum accuracy evenly guide material over pulley with a minimum wrap angle of 12°. For best accuracy keep wrap angle as consistent as possible.

Material ALUMINUM	Finish CLEAR ANODIZE		Heat Treat Weight
DIMENSIONAL TOLERANCES UNLESS OTHERWISE SPECIFIED	TITLE NOTCHED BEAM TRANSDUCER WITH ∅2" X 4-1/4" ROLLER		TENSITRON 733 South Bowen Street Longmont, CO 80501
.XXXX: ± .0005 / .XXX: ± .005 / .XX: ± .01 / ANGLE: ± 1°			
Scale 1:2 / No. Req'd	Drawn SHS	Date 3-21-12	Size / Drawing Number E-095-04-SC / REV 1
Next Assy	Checked	Date	
	Approved	Date	